REVISION HISTORY			
REV.	DESCRIPTION	DATE	DRAWN BY
1	ORIGINAL PRINT	6/29/2023	J. DOMINIACK

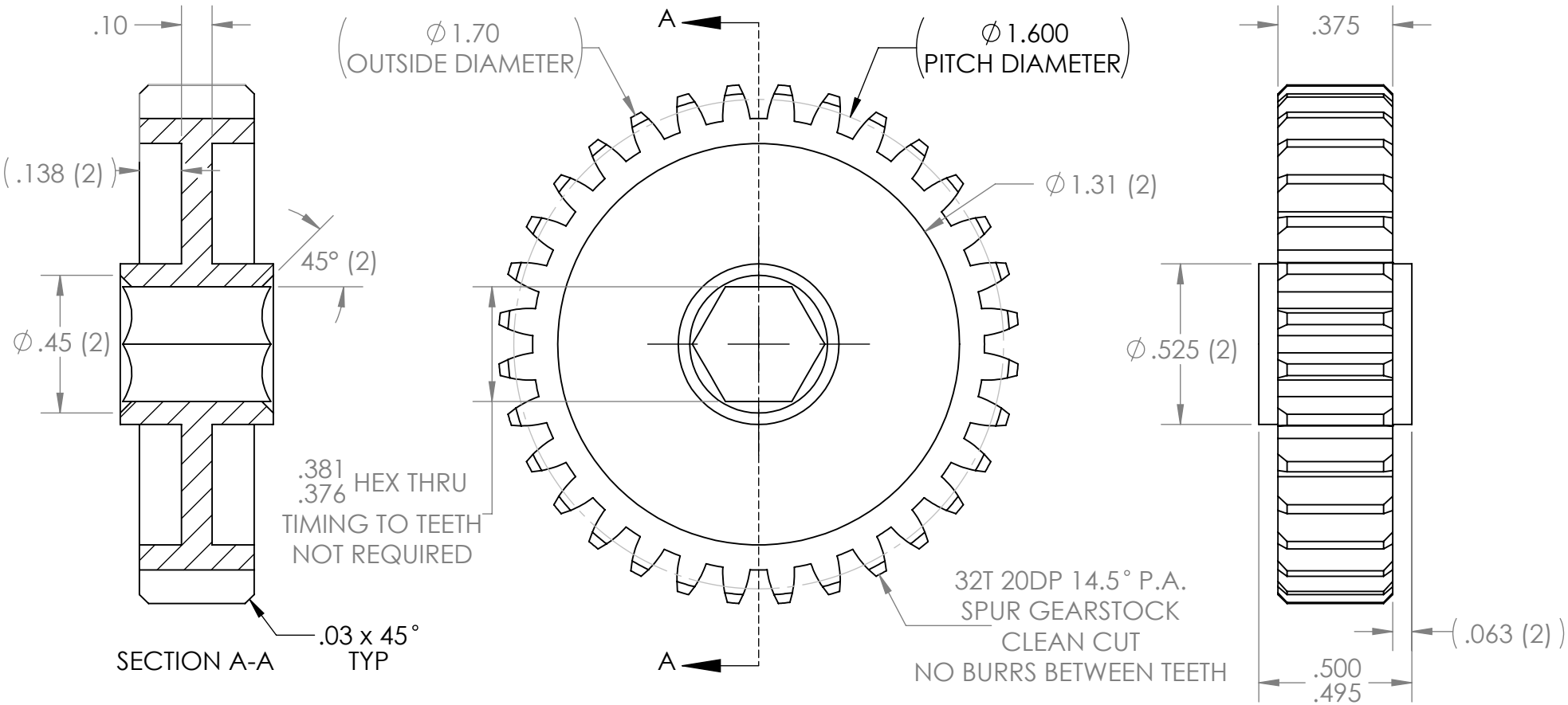

*** SEE CAD FOR ADDITIONAL TOOLPATH INFO***

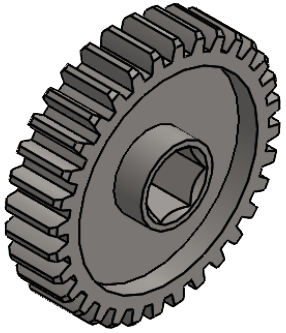

UNLESS OTHERWISE SPECIFIED:		COMMENTS:
DIMENSIONS ARE IN INCHES		DUAL DIMENSIONS ARE IN MILLIMETERS.
TOLERANCES:		BREAK ALL SHARP EDGES.
FRACTIONAL	±1/16	
ANGULAR: MACH	±1°	
ANGULAR: BEND	±5°	
ONE PLACE DECIMAL	±0.1	
TWO PLACE DECIMAL	±0.01	
THREE PLACE DECIMAL	±0.005	
FOUR PLACE DECIMAL	±0.0005	
MATERIAL	4140 STEEL	
FINISH	DEBURRED ZINC PLATED	
DO NOT SCALE DRAWING		

	NAME	DATE
CHECKED	NM	7/14/23
ENG APPR.		
MFG APPR.		
Q.A.		

AndyMark

TITLE:

32T 20DP 14.5PA
375IN HEX BORE GEAR

SIZE	DWG. NO.	REV
A	am-5136	1

SCALE: 2:1 | SHEET 1 OF 1

5 4 3 2 1